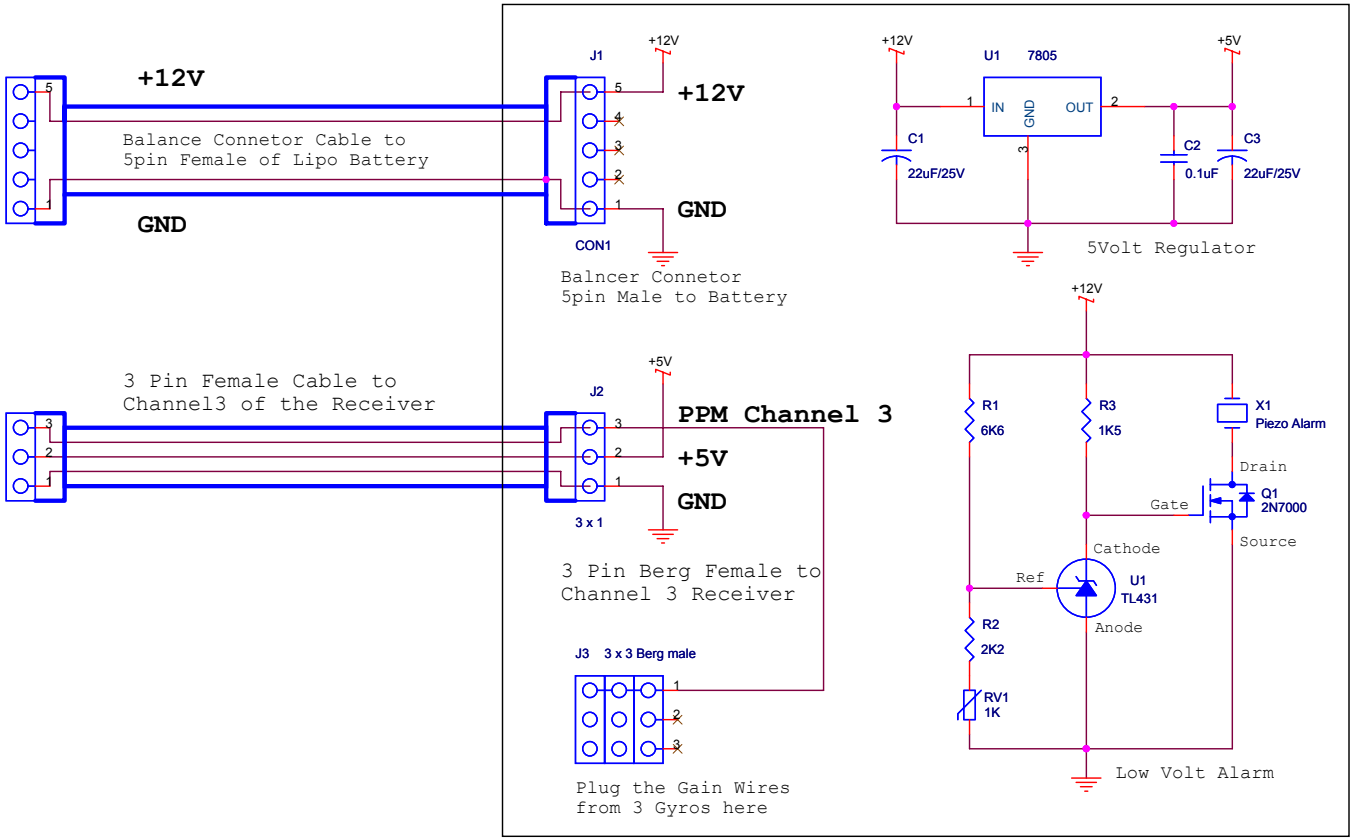CIRCUIT FOR 5V REGULATOR & BATTERY LOW VOLT ALARM & CH3 GAIN WIRING TO GYROS